future automation

EAL-S

ELECTRONIC ADVANCE & LIFT WITH SWIVEL
TV WALL MOUNT

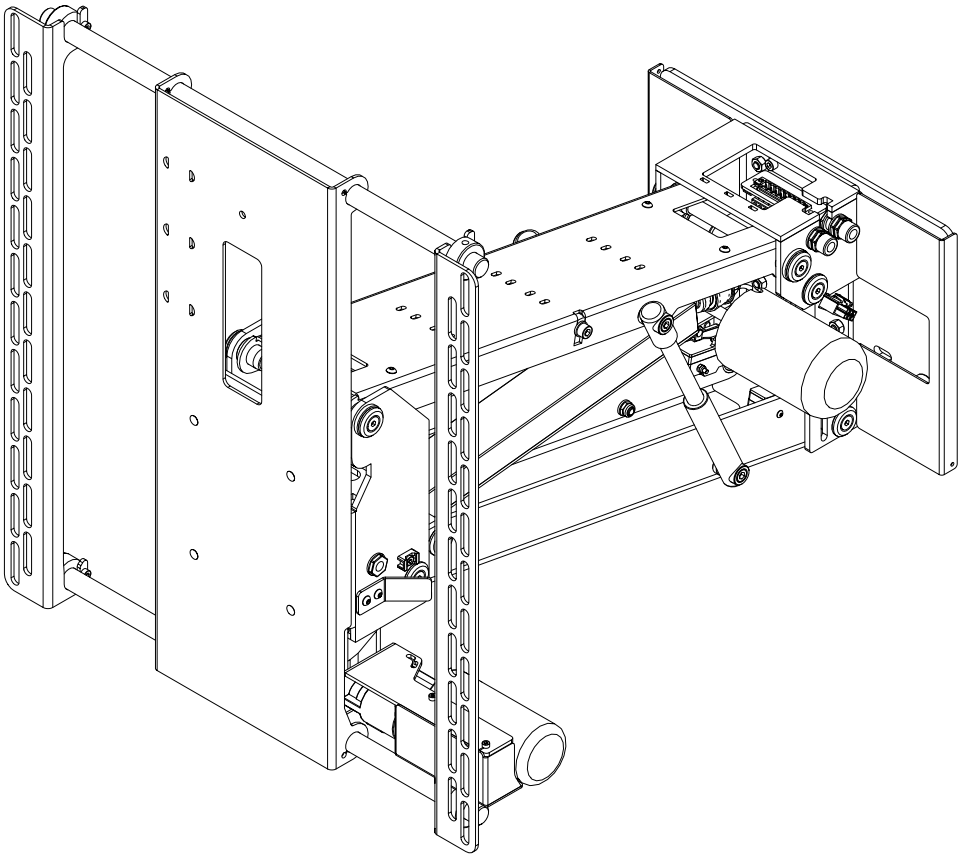

INSTALLATION
INSTRUCTIONS

ISSUE **003**

SAFETY
DISCLAIMER

IMPORTANT SAFETY INSTRUCTIONS BELOW

WARNING: Failure to provide adequate structural strengthening, prior to installation can result in serious personal injury or damage to the equipment. It is the installer's responsibility to ensure the structure to which the component is affixed can support four times the weight of the component and any additional apparatus mounted to the component.

WARNING: Do not exceed the weight capacity for this product as listed below. This can result in serious personal injury or damage to the equipment. It is the installer's responsibility to ensure that the total combined weight of all attached components does not exceed that of the maximum figure stated.

WARNING: Risk of death or serious injury may occur when children climb on audio and/or video equipment or furniture. A remote control or toys placed on the furnishing may encourage a child to climb on the furnishing and as a result the furnishing may tip over on to the child.

WARNING: Risk of death or serious injury may occur. Relocating audio and/or video equipment to furniture not specifically designed to support audio and/or video equipment may result in death or serious injury due to the furnishing collapsing or over turning onto a child or adult.

WARNING – RISK OF INJURY!

Only for use with equipment weighing **110LBS (50KG) OR LESS**.

Use with heavier projectors/equipment may lead to instability causing tip over or failure resulting in death or serious injury.

Bracket Suitable for Residential and Commercial Use.

ADDITIONAL WARNINGS:

1. Keep all documentation/instructions after fitting.
2. Read all technical instructions fully before installation and use. It is the installer's responsibility to ensure that all documentation is passed on to the end user and read fully before operation.
3. Do not use near water or outdoors unless the product has been specifically designed to do so.
4. Protect any cables or cords being used near this bracket from being walked on or pinched to prevent damage and risk of injury.
5. Use this product only for its intended purpose as described in the product instructions and only use attachments/ accessories specified by the manufacturer.
6. Do not operate the product if it is damaged in any way, liquid has been spilled or objects have fallen into the apparatus, the apparatus has been exposed to rain or moisture, does not operate normally, or has been dropped. Contact the original installer/manufacturer to arrange repair or return.

WARNING - To reduce the risk of burns, fire, electric shock, or injury to persons:

1. Clean only with a dry cloth and always unplug any electrical items being used in conjunction with this product before cleaning.

WARNING - The mechanism can be damaged when exposed to heat or naked flames:

1. Future Automation accept no responsibility for products damaged by exposure to heat or naked flames.
2. The mechanism can be damaged by extreme heat in any position, before, during and after installation.
3. It is up to the consumer to ensure proper precautions are taken to avoid damage to the mechanism, display, or accessories.
4. Future Automation recommend against having fires in a fireplace in the vicinity of electrical mechanisms.

Future Sound & Vision trading as Future Automation intend to make this and all documentation as accurate as possible. However, Future Automation makes no claim that the information contained herein covers all details, conditions or variations, nor does it provide for every possible contingency in connection with the installation or use of this product. The information contained in this document is subject to change without prior notice or obligation of any kind. Future Automation makes no representation of warranty, expressed or implied, regarding the information contained herein. Future Automation assumes no responsibility for accuracy, completeness or sufficiency of the information contained in this document.

PRODUCT WARRANTY
& RISK ASSESSMENT

WARRANTY INFORMATION

WARNING - The warranty offered for this product shall be annulled if the product is used improperly or in a way that is in breach of our Terms of Service.

Future Automation provides warranty for the mechanism you purchased for the period of **24 months** from the date of purchase, provided that it isn't used for unintended purposes.

Under the warranty, Future Automation aims to either solve the issue remotely (via telephone or email support) or if the mechanism requires a part, arrange a visit to your premises by a Future Automation approved engineer or send replacement items where appropriate.

Warranty repairs will be carried out as quickly as possible, but subject to parts availability. This warranty period is respectively extended for the period of a repair.

A malfunctioning product must be cleaned and placed into suitable packaging to protect against transit damage before organising delivery to a repair workshop.

All the complaints about defects must be submitted to the vendor/installer that sold this product, rather than directly to the manufacturer.

Any part of your system that needs to be replaced during a warranty repair becomes the property of Future Automation.

The warranty does not cover the following:

- Damages resulting from improper product use or maintenance.
- Repairs carried out by unauthorized persons.
- Natural wear and tear during operation.
- Damages caused by the buyer.
- Accidental damages caused by a customer or damages caused as a result of careless attitude or usage, or damages caused by natural disasters (natural phenomena).
- Any electrical, or other environmental work external to your Future Automation mechanism including power cuts, surges etc.
- Additional items not supplied by Future Automation although they may have been supplied together by the retailer
- Any 3rd party software products controlling your mechanism
- Any transfer of ownership. Warranty is provided only to the initial purchaser.
- Compensation for loss of use of the product, and consequential loss of any kind.

A separate Safety and Servicing Information document is provided with these instructions (additional copies can be found at www.futureautomation.co.uk/safety), and this document **MUST** be filled out by the approved Future Automation Dealer who is installing the product. This Warranty Sheet must be held by the end user for the duration of the products life and will be referred to during servicing or warranty queries.

The Safety and Servicing Information document also contains two Service History Forms that must be filled in by the approved Future Automation dealer who is performing the first required yearly service of this product.

One copy of the Service History Form must be held by the customer (along with the Warranty Sheet) and a duplicate copy must be held by the approved Future Automation dealer that performed the service. Missing and/or mismatching documents may delay or invalidate warranty claims.

Additional Service History Forms can be found on the Future Automation website for further yearly services.

RISK ASSESSMENT INFORMATION

It is the installer's responsibility to perform a risk assessment of installed products. Future Automation can provide guidelines to installers/dealer about what should be included in a risk assessment, but due to the individual nuances of each location/site, Future Automation cannot provide a full list of areas to risk assess.

For full risk assessment and safety information please view our Safety and Servicing guide available at www.futureautomation.net/safety

GUIDE
CONTENTS

SAFETY DISCLAIMER 1

PRODUCT WARRANTY & RISK ASSESSMENT 2

GUIDE CONTENTS 3

PACKAGE CONTENTS 4

MECHANISM QUICK-START GUIDE 5

MECHANISM POSITIONING 6

REMOVING SCREEN MOUNT 7

MECHANISM MOUNTING 8

CABLE MANAGEMENT 9

ATTACHING SCREEN MOUNT 11

SWITCH ADJUSTMENTS 12

MECHANISM POSITIONS 13

WALLBOX MOUNTING. (OPTIONAL) 15

GENERAL CONTROL 18

MECHANISM CONTROL 19

RADIO FREQUENCY (RF) 20

CONTACT CLOSURE 21

RS232 CONTROL 22

INTEGRATION CONSIDERATIONS 23

PACKAGE
CONTENTS

1 - EAL-S

1.1 - WALL PLATE
1.2 - WALL PLATE COVER (X2)
1.3 - SCREEN MOUNT UPRIGHT

2 - Control Box (Size and Style May Vary)

3 - Infrared (IR) Remote Control

ITEMS NOT SHOWN ON PAGE

EAL-S ACCESSORY PACK
- X2 AAA BATTERIES
- SCREEN FIXING PACK (CATS LEAD WITH RJ45 CONNECTOR)
- MAINS POWER, IR AND CONTACT CLOSURE LEADS

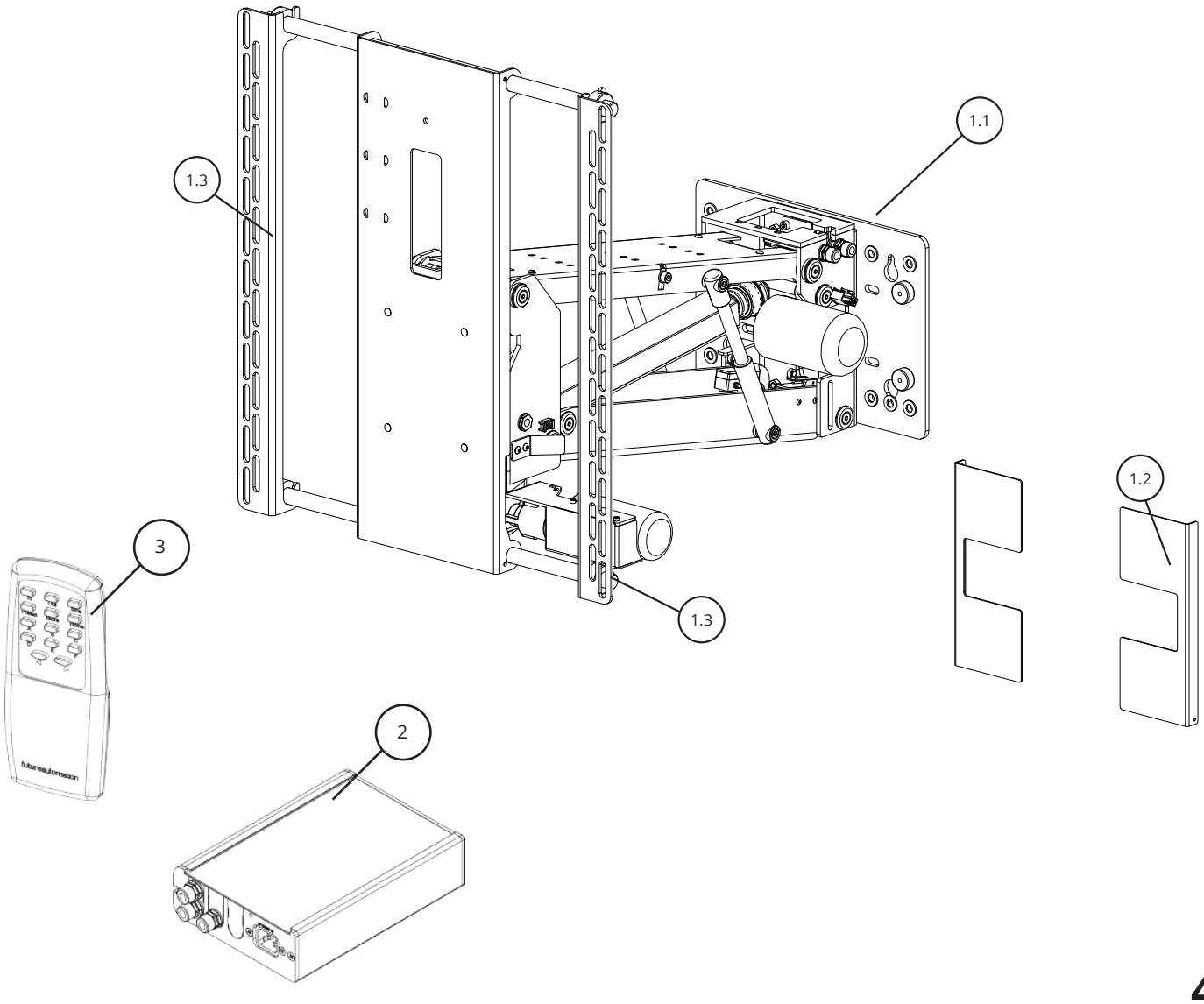

MECHANISM
QUICK-START GUIDE

Some Future Automation mechanisms may ship with the control box disconnected to prevent damage during transit. In order to operate the mechanism, the control box will need to be reconnected, then have mains power applied along with the desired control method.

RECONNECTING THE CONTROL BOX

To reconnect the mechanism control box, follow the below steps:

1. Make sure the power is disconnected from the control box.
2. Remove the retaining screw and washer from the end of the control box to allow removal of the control box lid. (Image 1 Below).
3. Slide off the control box lid to reveal the control board inside.
4. Locate the green connector on the end of the loom leading from the lift mechanism. This plug will have a small tag attached stating the correct connecting socket on the control board (e.g. “AC1”, “DC2”...) (Image 2 Below).
5. Plug the green connector into the corresponding socket on the control board. This plug is handed and will only connect correctly one way. Do NOT force the connector into the socket, this can cause serious damage to the control board and mechanism.
6. Route the wiring loom out of the end of the control box by inserting the black plastic inserts into the slots provided. (Image 3 Below).
7. Slide the control box cover back over the control board and replace the fixing screw and washer.

Image 1.

Image 2.

Image 3.

Image 4.

IMPORTANT

For the mechanism to operate, the green three way safety connector with the loop of wire attached, must also be plugged into the end of the control box. (Image 4 above). If this connector is not plugged in, a bright red LED will be visible inside control board and the Input Confirmation Input LED will be permanently illuminated.

MECHANISM
POSITIONING

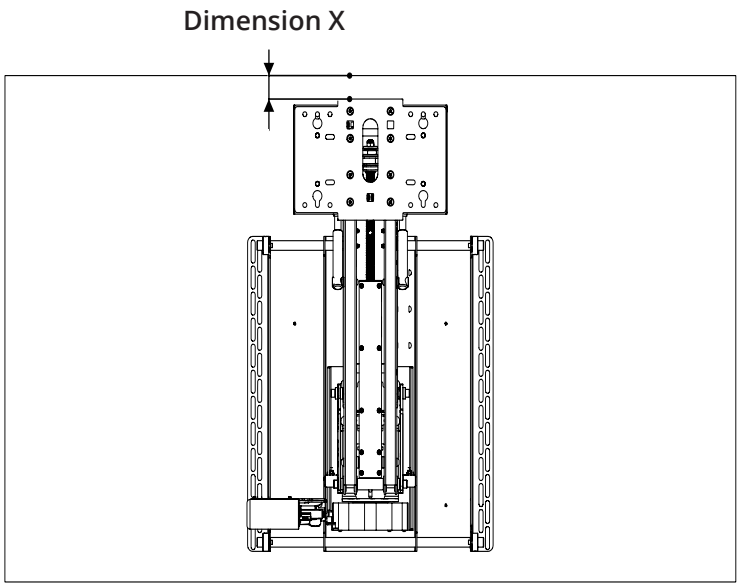

1 Lay the screen flat. Align the mechanism to the screen's mounting holes.

2 Measure from the top of the screen to the top of the wall plate.
Use this measurement to determine the correct wall mounting position for the mechanism.

3 Ensure the screen starts a minimum of 70 mm (2 3/4 in.) below any object protruding 305 mm (12 in.) or less from the wall (e.g. a mantelpiece).

4 For protrusions greater than 305 mm (12 in.), the screen must start proportionally lower to maintain clearance.

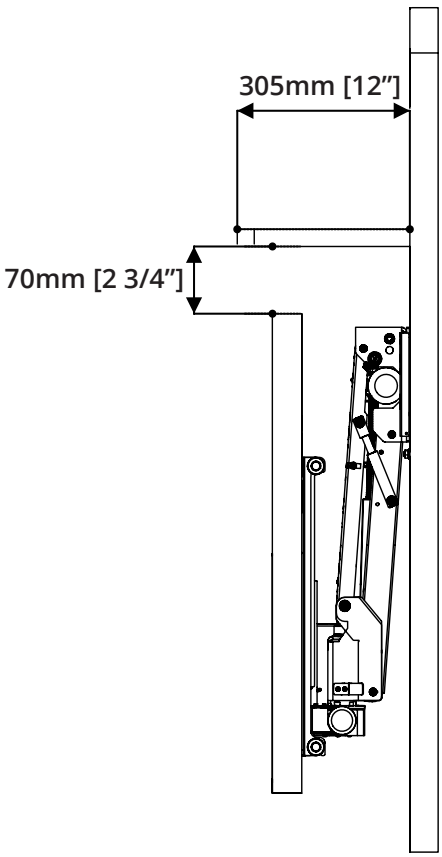

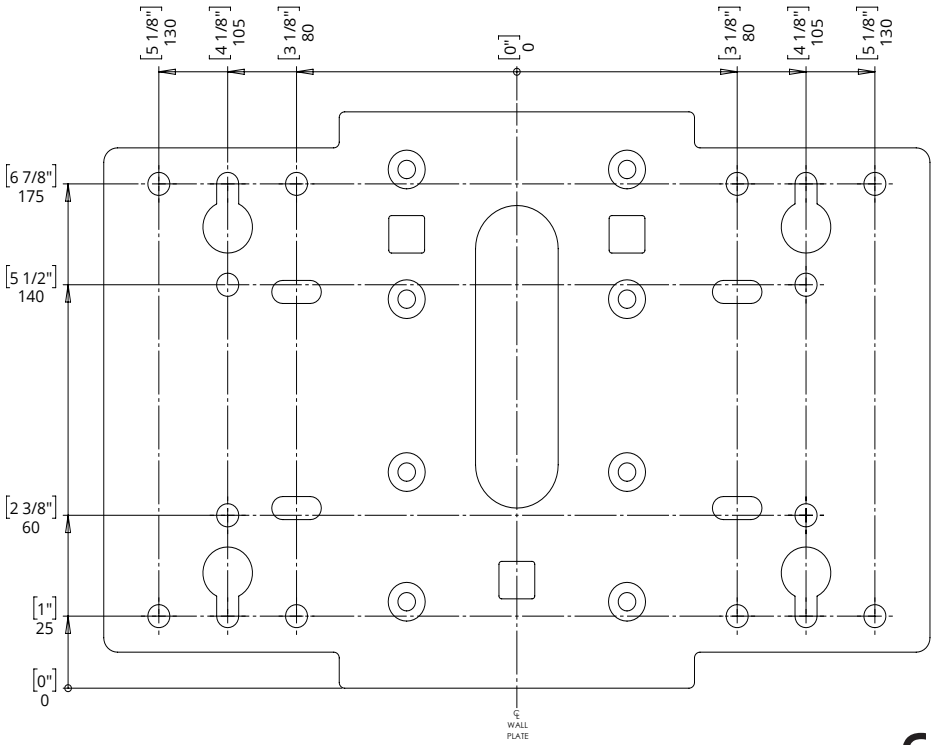

REMOVING
SCREEN MOUNT

1 To make the process of mounting the Mechanism to the wall easier, the Screen Mount Uprights should be removed.

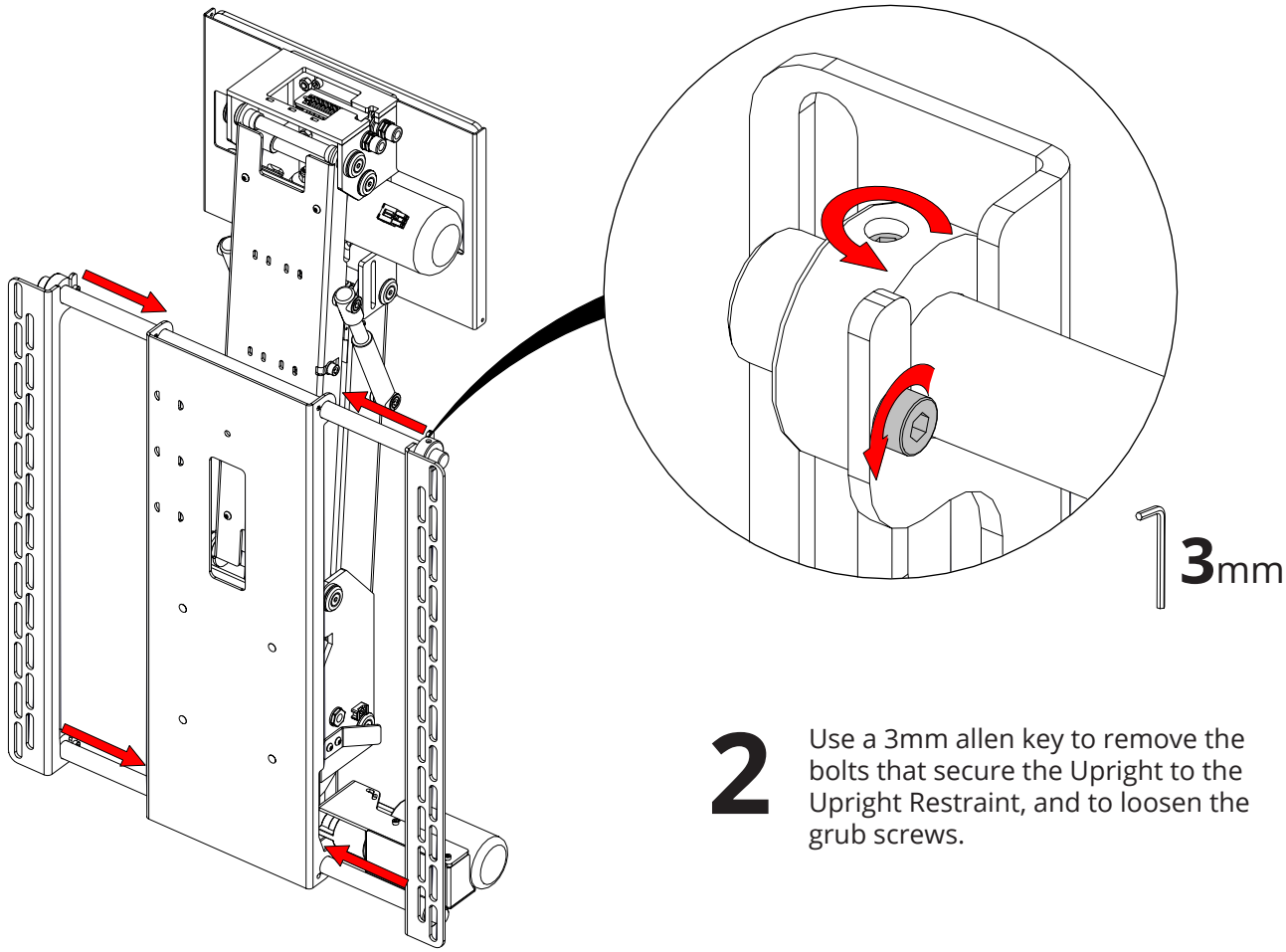

2 Use a 3mm allen key to remove the bolts that secure the Upright to the Upright Restraint, and to loosen the grub screws.

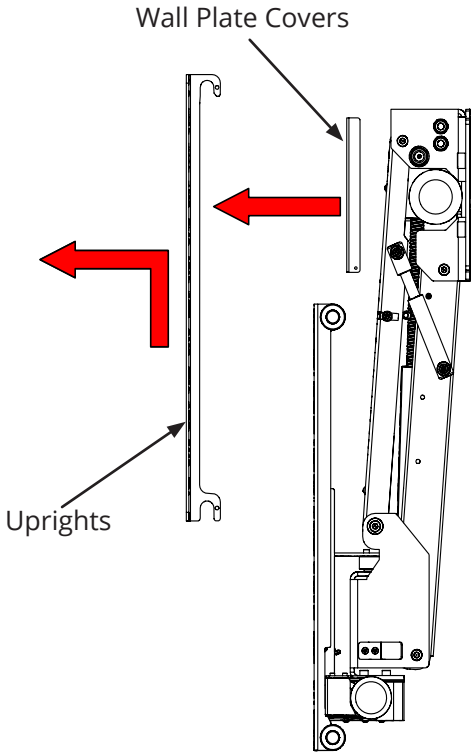

3 Once the screws are removed, unhook the Uprights from the Cross Bars.

4 Wall Plate Covers can be pulled off (they are held by magnets), giving access to the mechanism mounting holes.

MECHANISM
MOUNTING

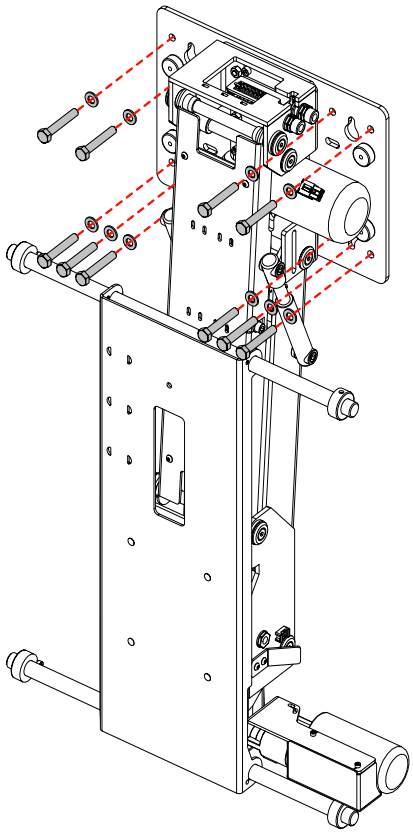

1 Ensure the mounting wall is structurally suitable and appropriate fixings are used before continuing installation.

2 Position the mechanism at the final mounting height on the wall and attach bolts in the locations shown.

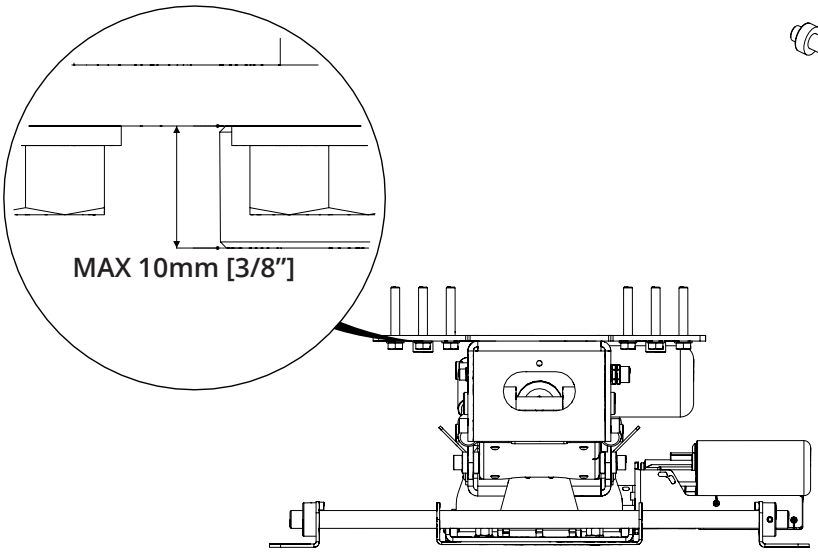

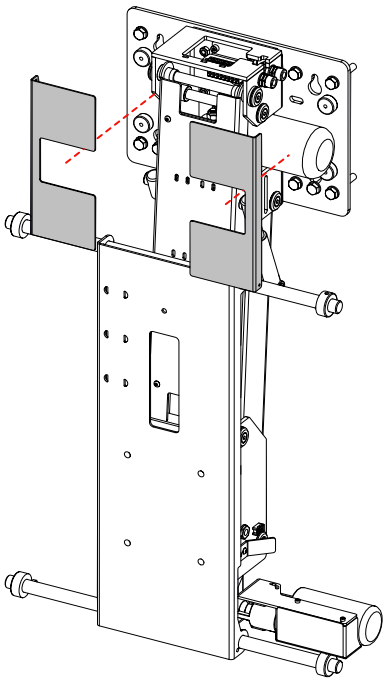

3 Make sure that the fixing heads do not protrude more than 10mm [3/8”].

4 Reattach the Cover Plates to the magnets on the Wall Plate.

CABLE MANAGEMENT

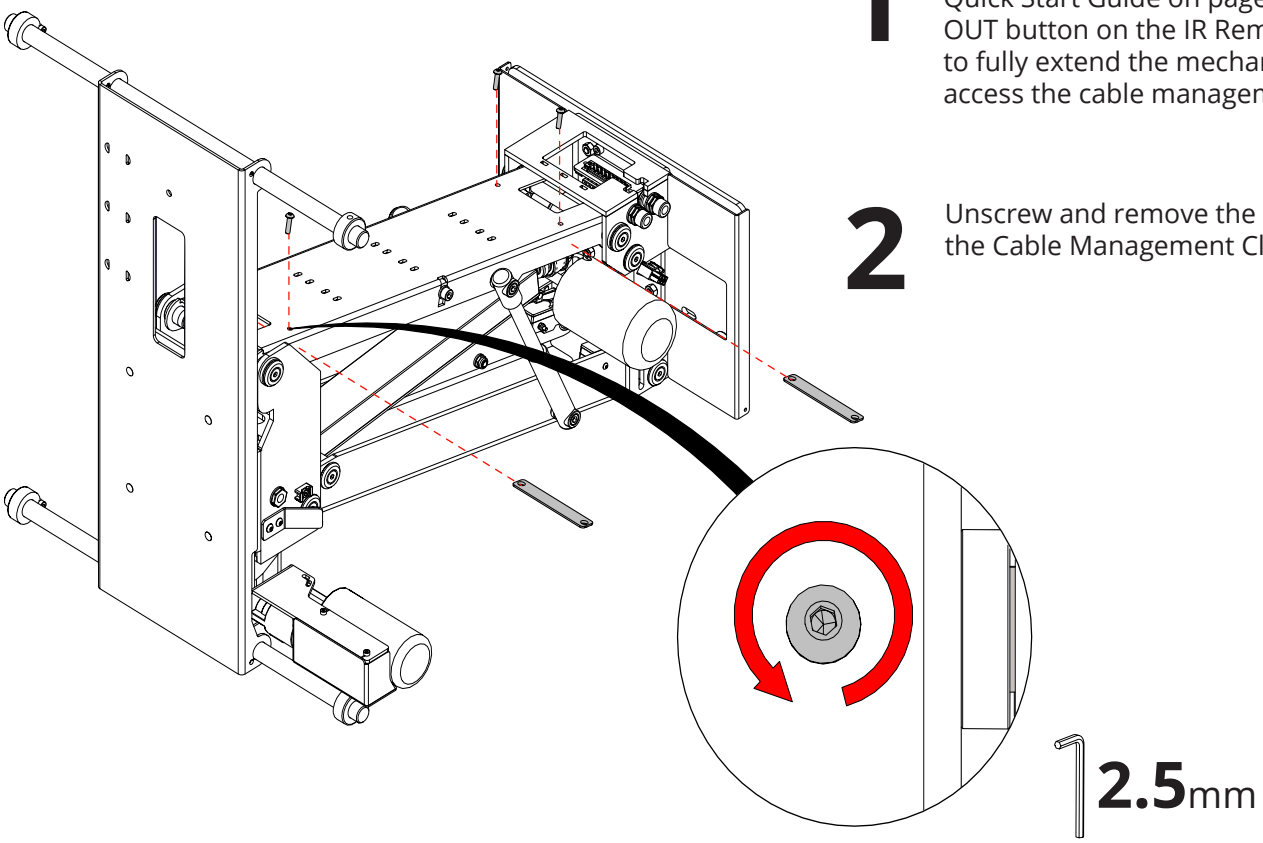

1 Power up the mechanism using the Quick Start Guide on page 5. Press the OUT button on the IR Remote Control to fully extend the mechanism and access the cable management areas.

2 Unscrew and remove the bolts securing the Cable Management Clamps.

3 Remove the Cable Management Clamps from the mechanism. Retain the bolts and clamps for later use when securing the cables.

4 Route the cables through the rear of the mechanism.

5 Run the cables along the central arm toward the front of the mount. Ensure sufficient slack is provided at all pivot points.

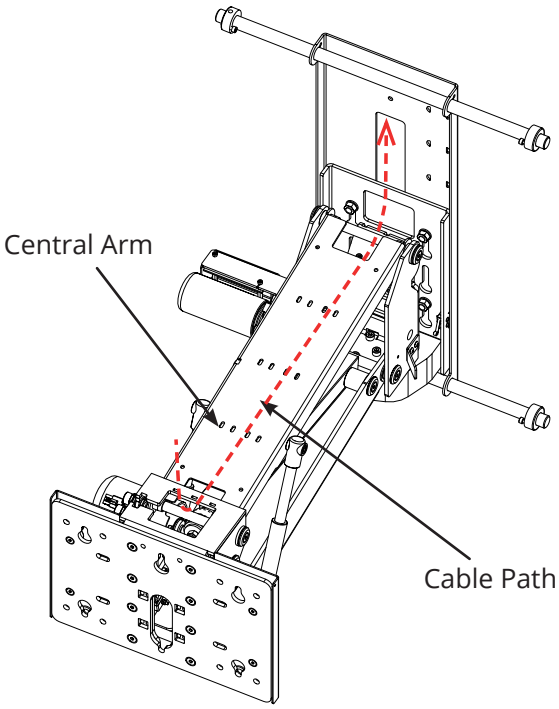

CABLE
MANAGEMENT CONT

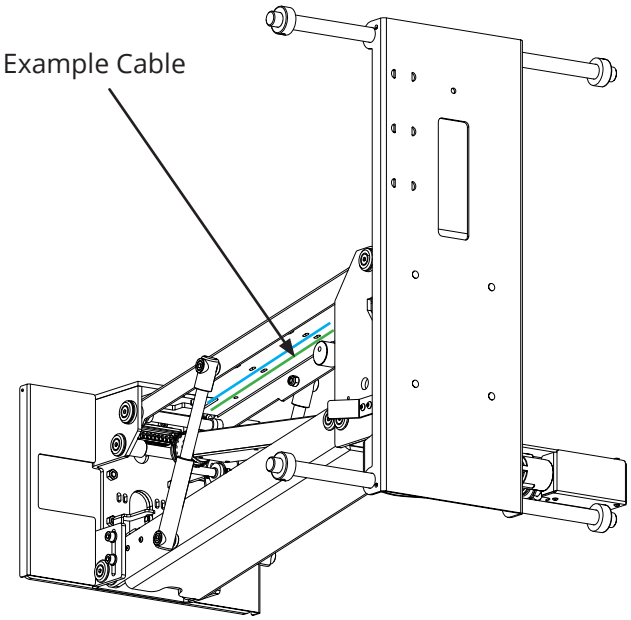

1 Ensure no cable diameters are larger than 10mm [0.4”]. Secure all cables along the central arm using the two Cable Management Clamps.

NOTE: Stacking cables along the central arm will interfere with the mechanism during operation.

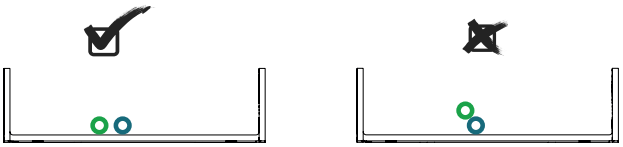

2 Cables can be zip tied to the front of the mechanism through any of the six loops if necessary.

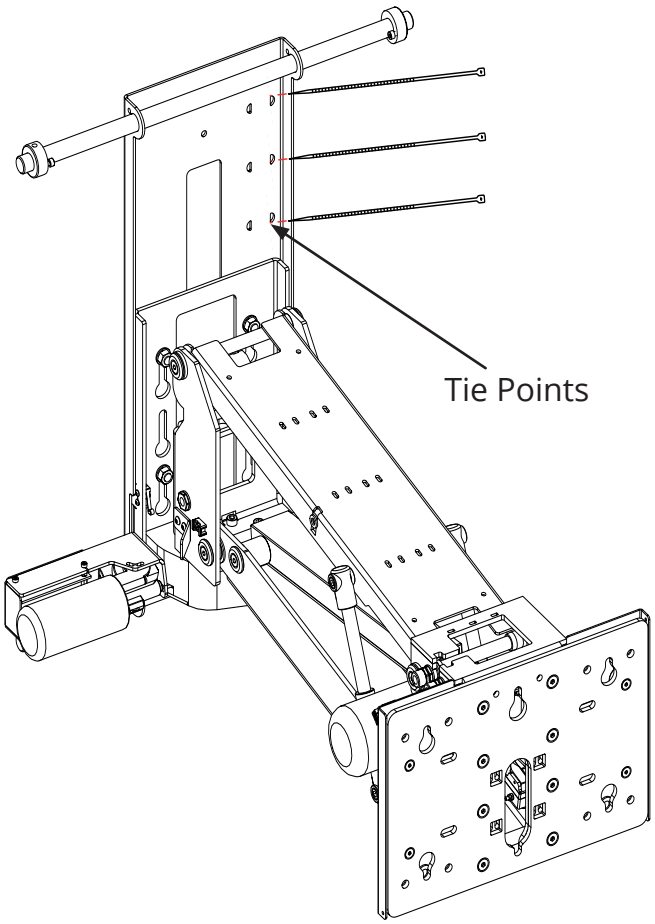

ATTACHING
SCREEN MOUNT

Screens with recessed mount holes or uneven backs may require the use of the supplied spacers.

1 Lay the screen down on a safe surface and place the screen uprights on to the screens VESA holes. To adjust the upright position remove them M8 bolt and slide to desired width.

2 Secure in place using the fixings in the provided fixings pack.

NOTE: If your screen is not VESA mount compatible you will need to attach an adapter to the Screen Mount Frame at this stage.

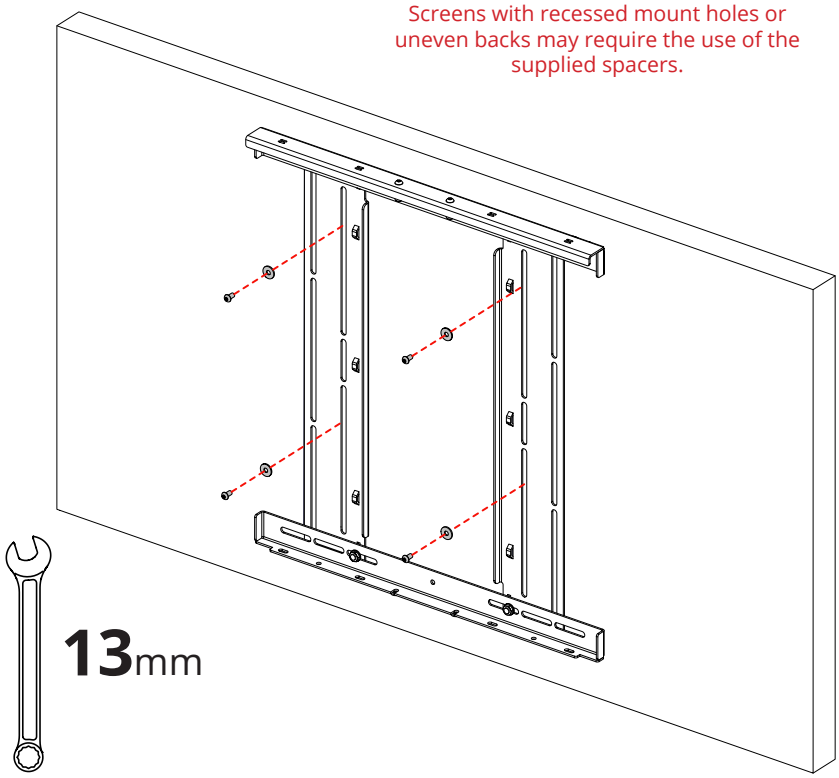

3 Hook the Uprights onto the cross bars.

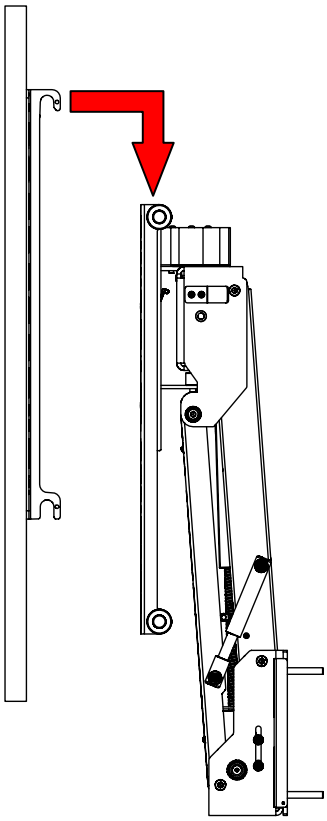

4 Align the threaded holes in the Restraints with the holes in the Upright Mounts.

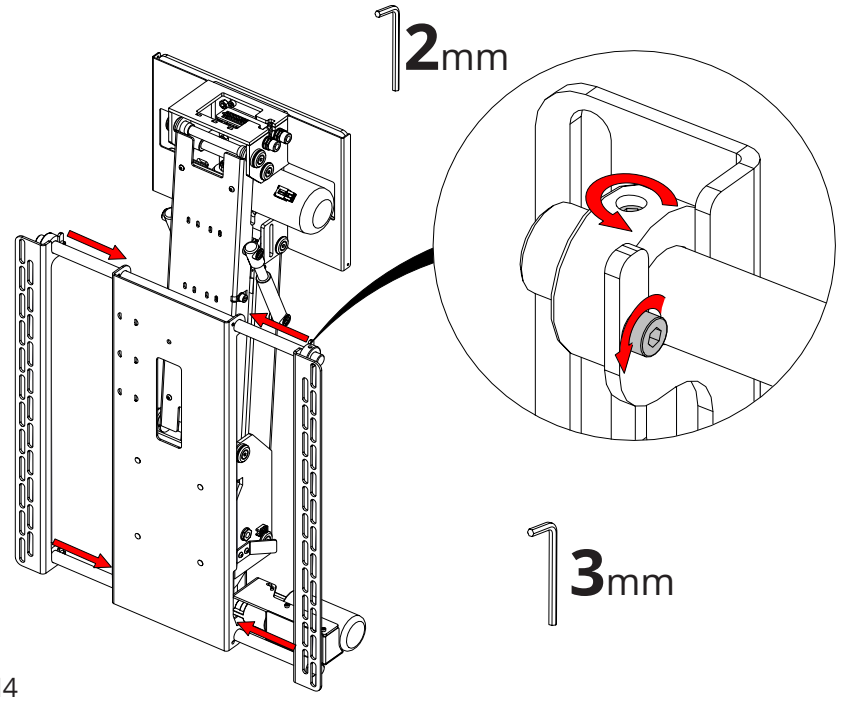

5 Reinstall the previously removed M4 cap head bolts and tighten to secure the components together.

6 Tighten the grub screws in the Restraints to lock the mount in position.

SWITCH
ADJUSTMENTS

1 To set the Out Switch striker, loosen the two M6 cap head bolts located on the left. This will free the Striker Plate.

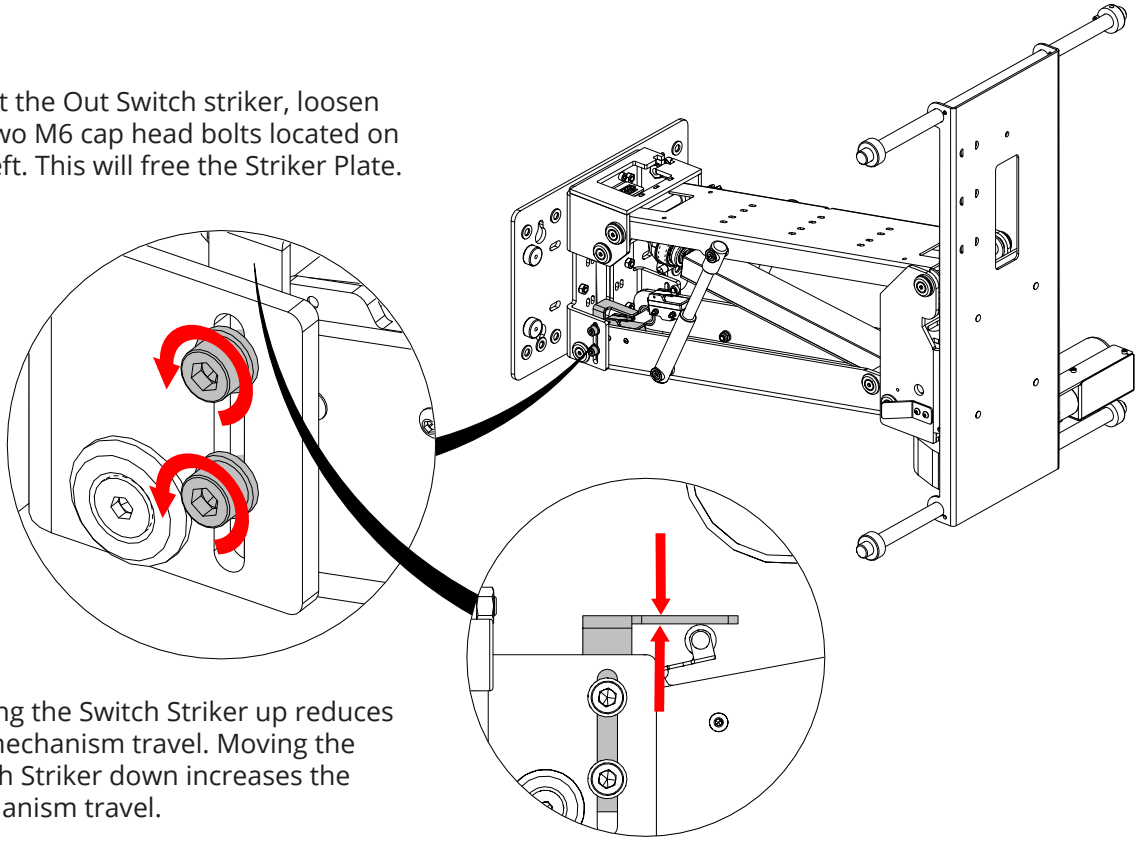

5mm

2 Moving the Switch Striker up reduces the mechanism travel. Moving the Switch Striker down increases the mechanism travel.

3 Moving the IN Switch Striker upward causes the mechanism to stop earlier, increasing the distance from the wall in the IN position.

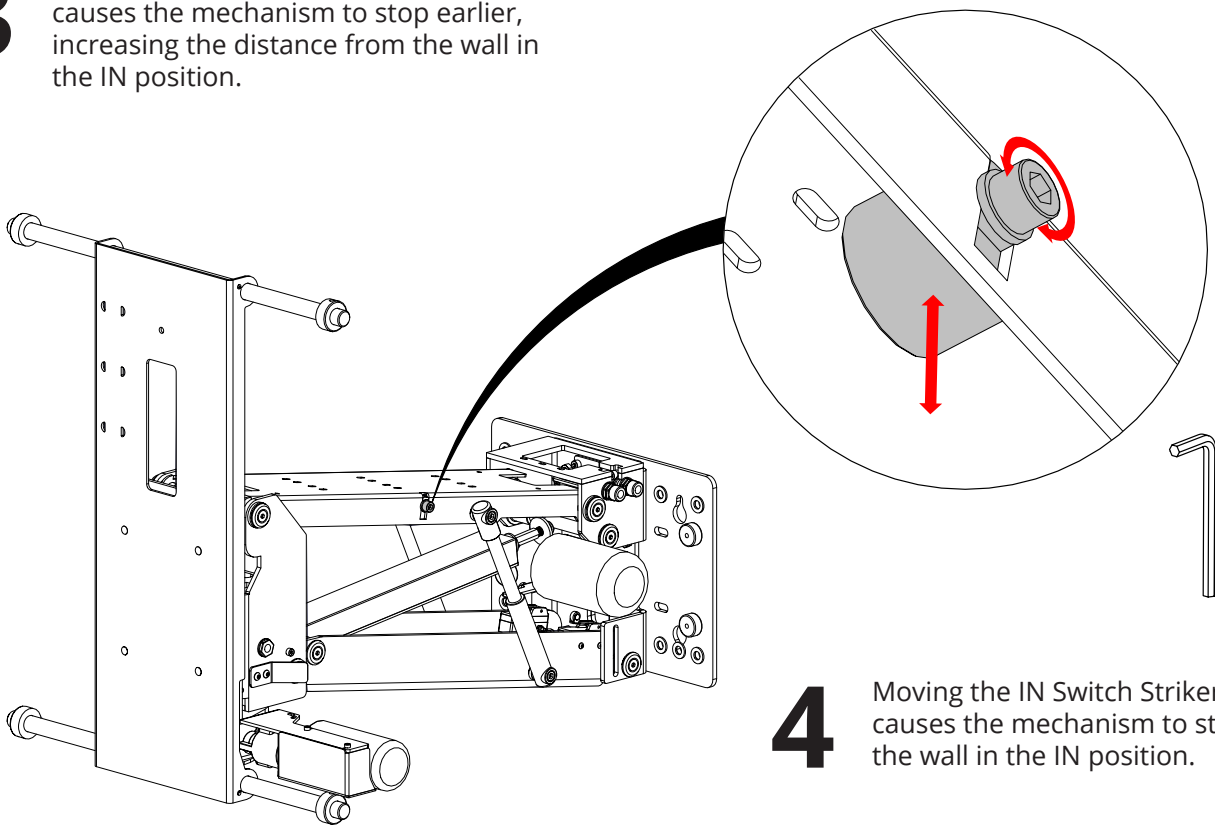

5mm

4 Moving the IN Switch Striker downward causes the mechanism to stop closer to the wall in the IN position.

MECHANISM POSITIONS

SETTING

(optional)

Before storing new mechanism positions it is important to check the following.

- Make sure that all side panels are fitted securely in place.
- Nothing is obstructing the movement of the mechanism or screen.
- Product is square and level on the wall or in wallbox.
- The product condition is good and all the wiring is neatly organised.

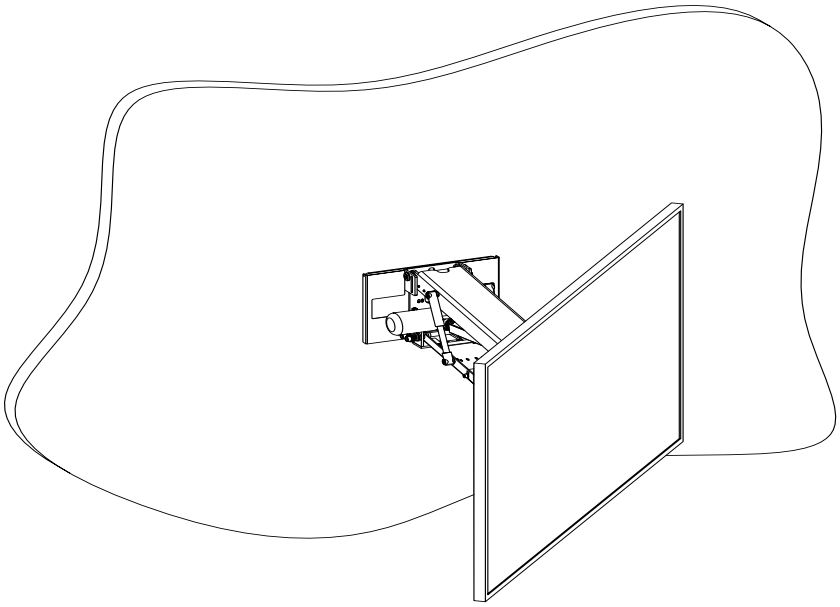

IN

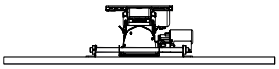

OUT PARALLEL

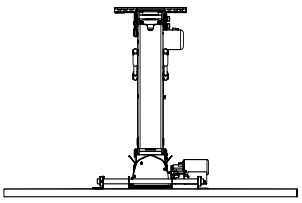

MAX LEFT
(NO LIMIT SET)

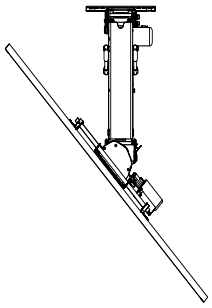

MAX RIGHT
(NO LIMIT SET)

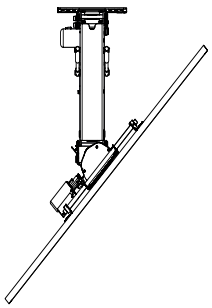

Storing new locations - Press **STOP** in the desired position then press **STORE** and you'll have a 2 second window to press **HOME**, **PRESET** or buttons **A-F** to save that position to that particular button.

Multiple custom positions can be stored.

MECHANISM POSITIONS

SETTING

(optional)

Mantelpieces or other obstructions can affect whether or not the mechanism is able to complete a full rotation either side.

To prevent a collision, a **Maximum Limit** can be set.

Right Maximum Limit

- **OUT** , **>** , **STOP** (at desired position), **STORE + E**

Left Maximum Limit

- **OUT** , **>** , **STOP** (at desired position), **STORE + D**

Small And Large Screen With A Safe Limit Angle.

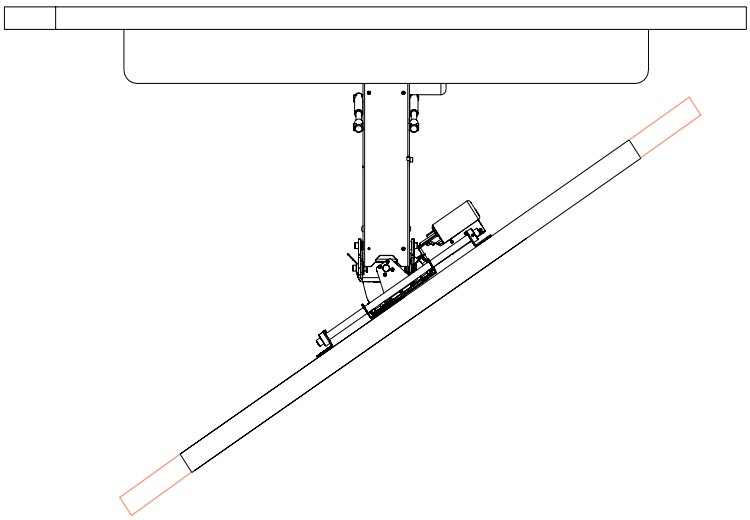

Right Max Rotation With A Small And Large Screen.

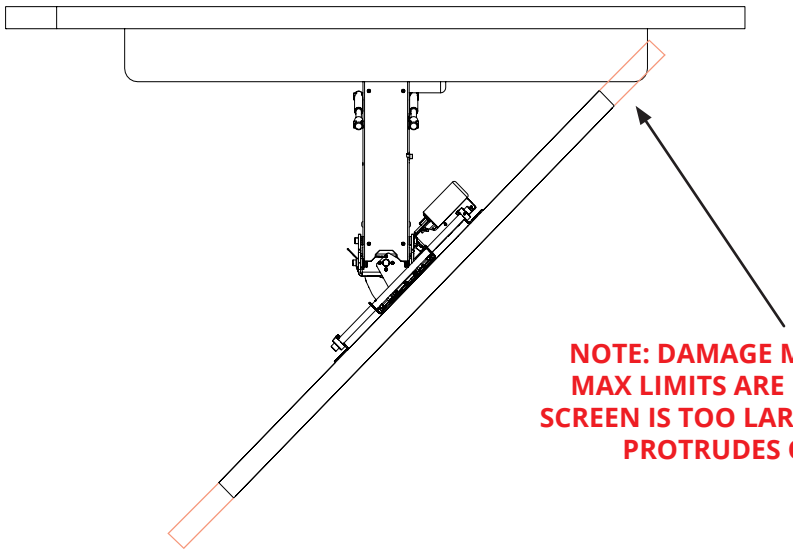

NOTE: DAMAGE MAY OCCUR IF THE MAX LIMITS ARE NOT SET AND THE SCREEN IS TOO LARGE, OR THE MANTEL PROTRUDES OUT TOO FAR.

WALLBOX
MOUNTING.
(OPTIONAL)

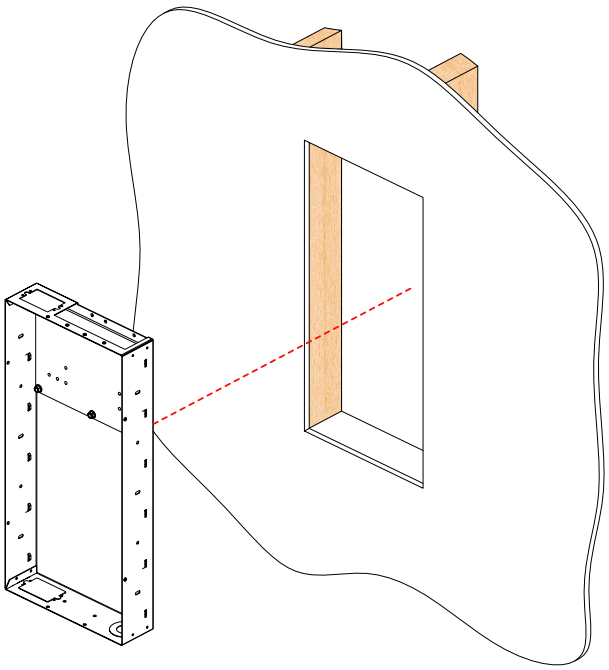

1 The optional Wallbox comes pre-assembled, so the trim around the edges needs to be removed before installation.

2 Remove the M4 bolts around the inside edges of the Wallbox to remove these trim pieces.

3 Follow the guide for creating a recess in the wall using the EAL-Stech sheet. Place the Wallbox into the recess.

4 Attach your fixings to the inside of the Wallbox to secure it in place.

It is the installers responsibility to obtain the appropriate fixings for securing the Wallbox and attaching the Mechanism to the reinforced plate.

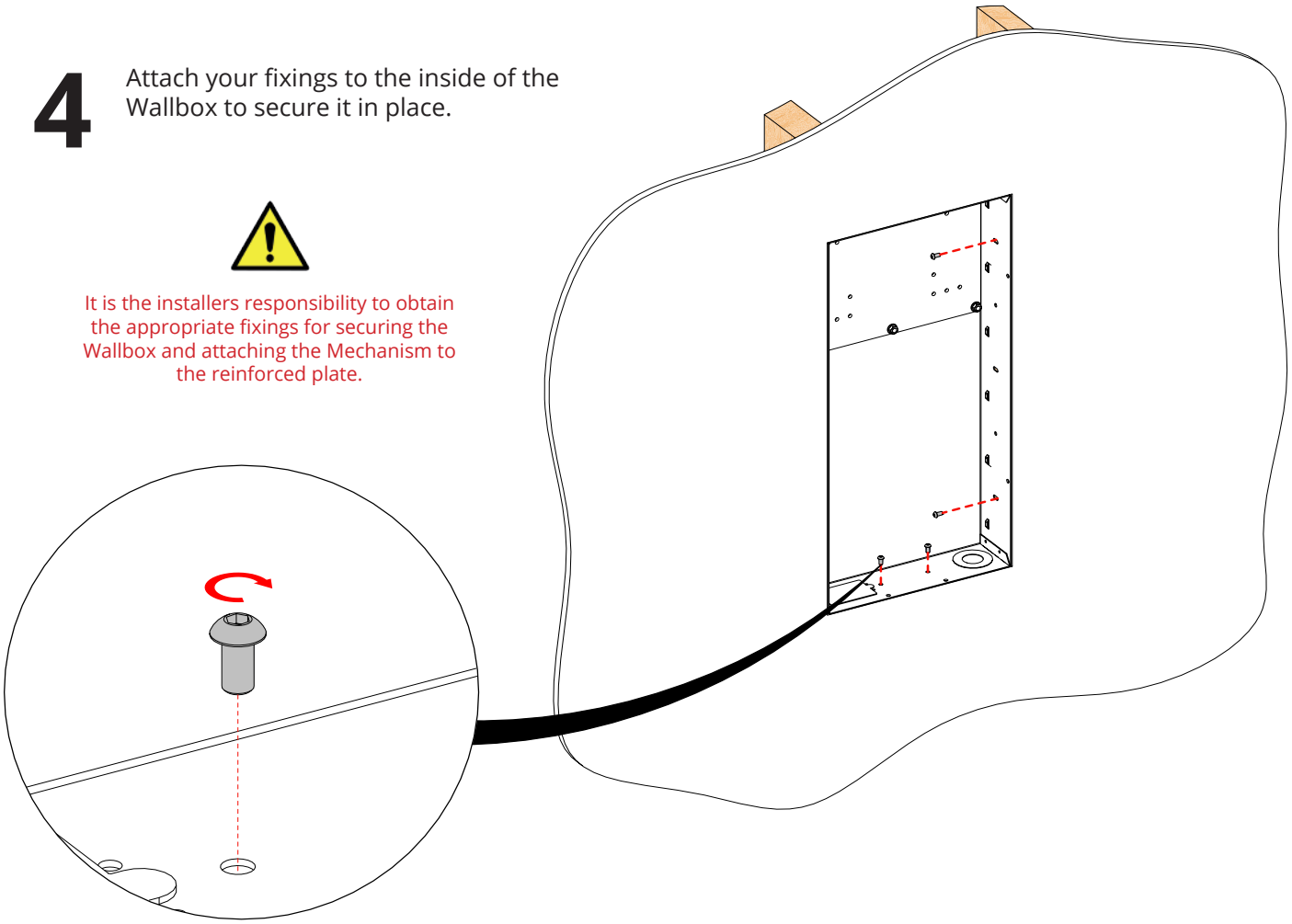

WALLBOX
MOUNTING CONT.
(OPTIONAL)

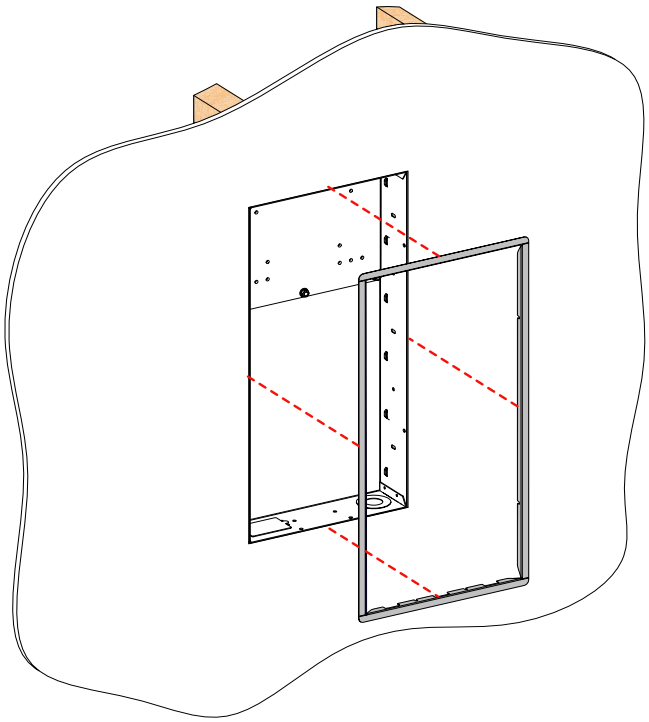

5 Replace the four pieces of Wallbox trim and secure in place with the supplied M4 bolts.

2.5mm

6 Take 8 M4 x 5mm button head bolts secure the Trim Strips to the wallbox.

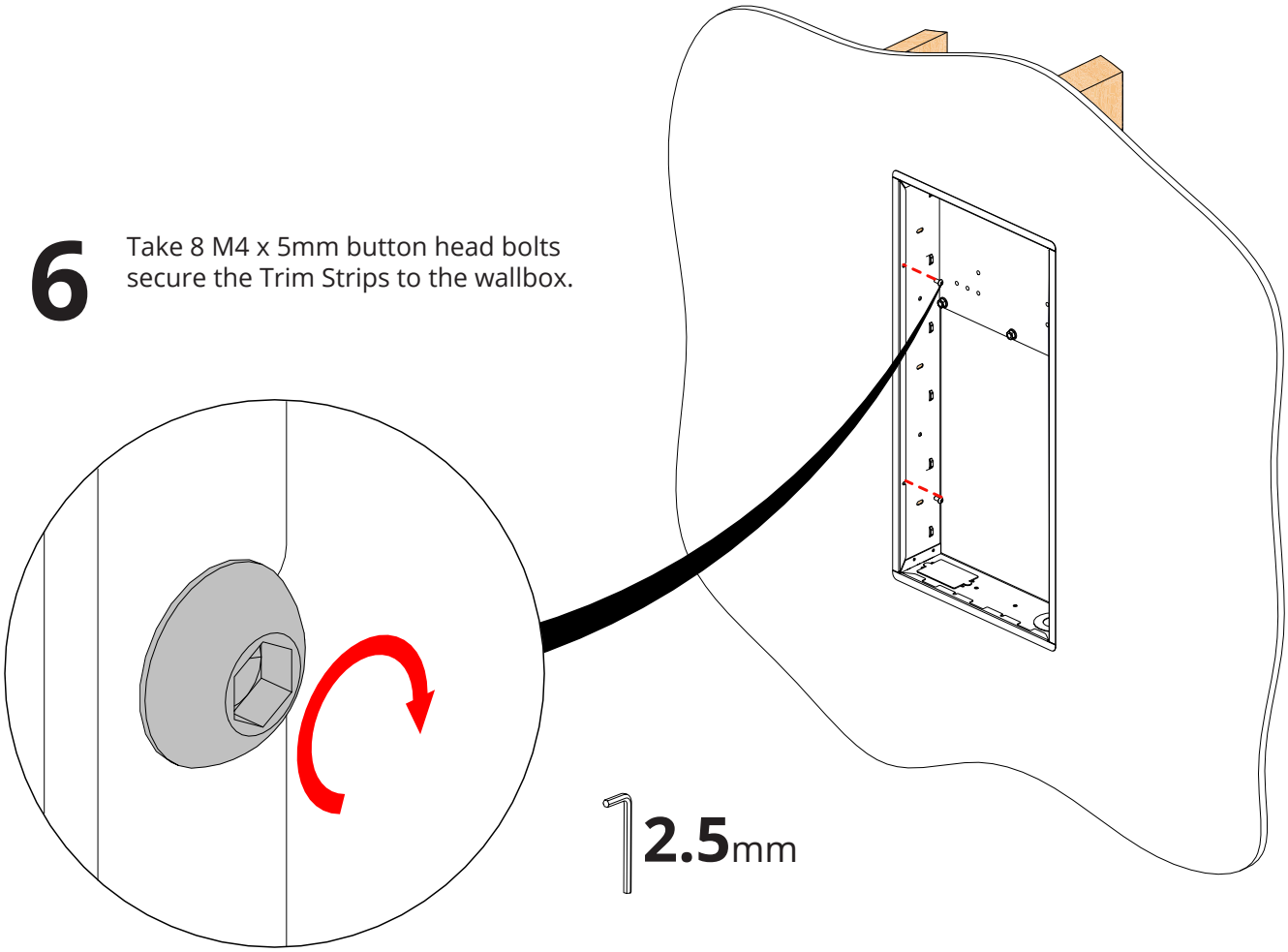

2.5mm

WALLBOX
MOUNTING CONT.
(OPTIONAL)

7 Attach the mechanism to the reinforced plate at the base of the wallbox using the supplied M8 bolts.

It is the installers responsibility to ensure that Mechanism is securely attached to the Wallbox.

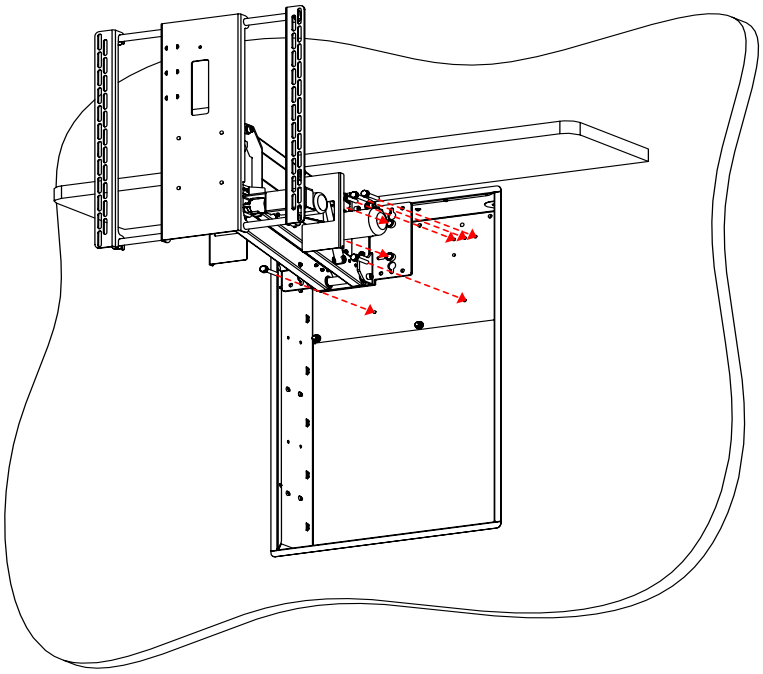

8 Make sure that the mechanism seats properly within the wallbox by pressing **IN** on the IR remote.

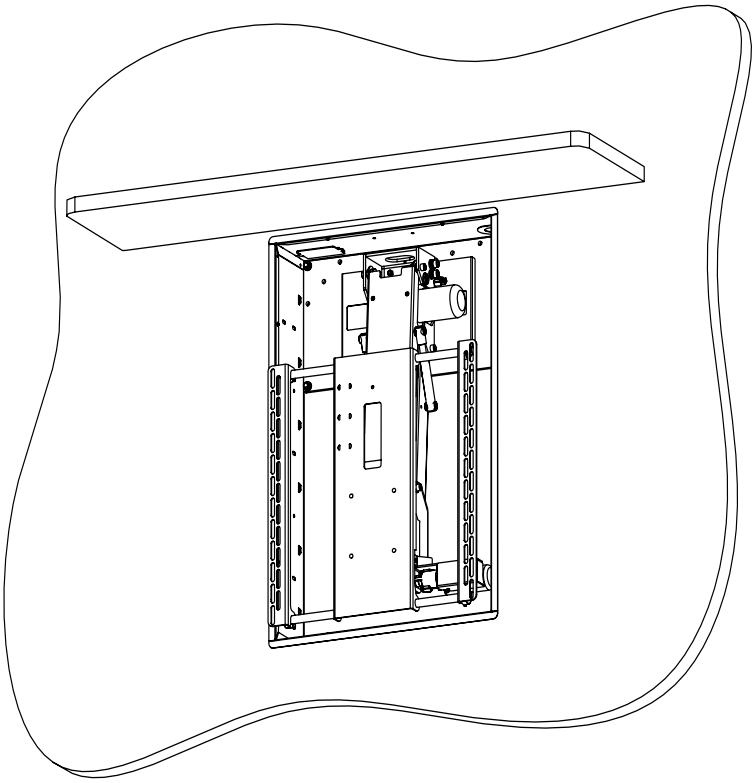

GENERAL
CONTROL

This mechanism has multiple standard control methods, each of which requires a different input method to the control box. For ease, the input sockets on the control board are labelled below.
(Control box size and style may vary to image shown)

CONTROL BOX INPUTS

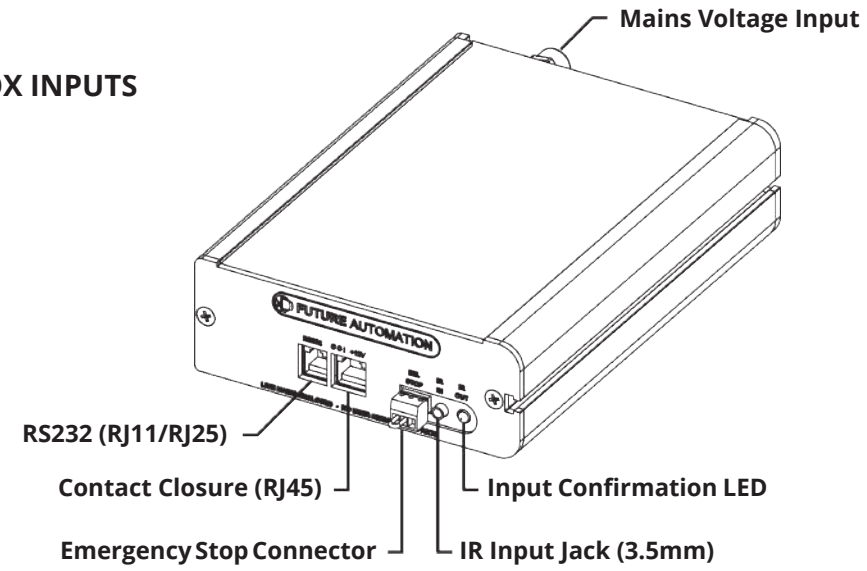

MECHANISM EMERGENCY STOP CONNECTOR

This mechanism features an Emergency Stop Connector, which MUST be plugged into the control box in the connector labelled above for the mechanism to operate. If this connector is not plugged in, the Input Confirmation LED will be permanently lit. As per the red plastic tag attached to the Emergency Stop Connector (and shown below), the small loop of wire in this connector is designed to be replaced by a third party safety mechanism.

REPLACING MECHANISM BATTERIES

The standard Future Automation Infrared (IR) remote control required x2 AAA batteries to operate. These are provided with the mechanism in the Accessories Pack. These batteries can be replaced as the per the image below.

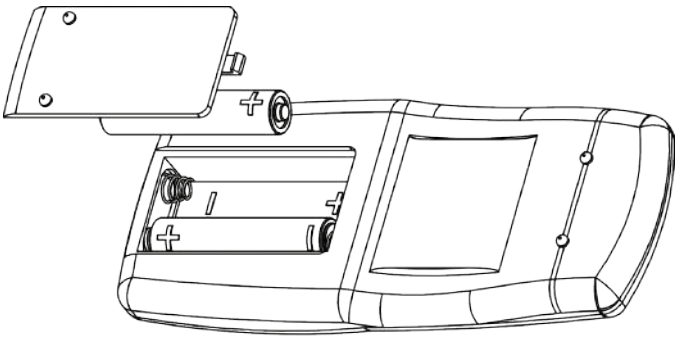

MECHANISM
CONTROL

Infrared (IR)
This Mechanism can be controlled via the supplied 14 button Infrared (IR) Remote Control, pair with the supplied Infrared (IR) lead and sensor.

The mechanism's functions can be controlled by plugging the Infrared (IR) lead and sensor into the 3.5mm IR Input Jack shown on the General Mechanism Control page.

Confirmation of Infrared (IR) input will be shown by a single flash of the large green LED located on the end of the control box.

As Infrared (IR) control works over line of sight, the Infrared (IR) sensor must be directly viewable from what ever location the remote control is being used from.

Infrared (IR) Remote Control Button Layout

IN - Takes mechanism to forward facing centre position.

PRESET - Brings the mechanism to learnt position.

STORE - Programs current mechanism position to learn position.

OUT - Swivels the mechanism to learnt OUT position.

STOP - Will stop the operation of the mechanism at ANY position.

HOME - Takes mechanism to forward facing centre position when swivelled.

< - Rotates mechanism left.

> - Rotates mechanism right.

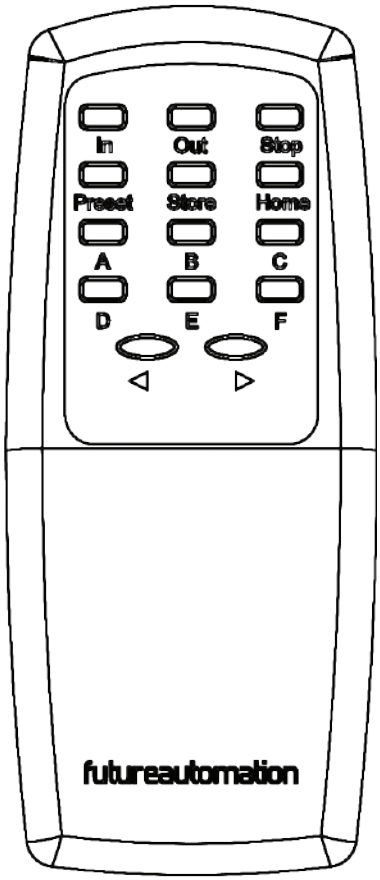

STORE + PRESET - Pressed within 1 second of each other stores **PRESET** position.

STORE + E - Pressed within 1 second of each other clears **PRESET** and sets swivel 180° right and left.

STORE + D - Pressed within 1 second of each other sets left swivel limit.

STORE + F - Pressed within 1 second of each other sets right swivel limit.

STORE + A-C, OUT - Pressed within 1 second of each other stores positions A-C.

A, B, C - Brings the mechanism to learnt position.

IMPORTANT
Only buttons indicated above are functional with the product. Any other button press will STOP the mechanism.

RADIO FREQUENCY
(RF)

If purchased with the Radio Frequency (RF) control option, this mechanism can be controlled via the supplied 4 button Radio Frequency (RF) Remote Control, paired with the in-built Radio Frequency (RF) sensor.

Confirmation of Radio Frequency (RF) input will be shown by a single flash of the large green LED located on the end of the control box.

Radio Frequency (RF) control does not require line of sight, but signal can be affected by cabinet thickness, cabinet material or other electronic signals (i.e. strong WIFI signals).

Radio Frequency (RF) Remote Control Button Layout

IN - Brings the mechanism upwards and towards the wall.

STOP - Will stop the operation of the mechanism at ANY position.

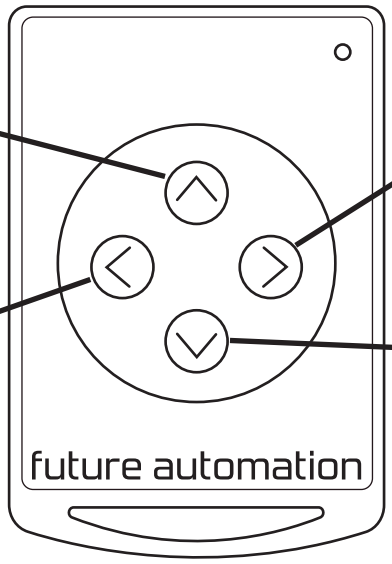

STOP - Will stop the operation of the mechanism at ANY position.

OUT - Brings the mechanism way from the wall and downwards, without swivelling.

The Radio Frequency (RF) Remote Control can only be used to recall the above functions.

The mechanism limits and preset positions must be programmed using the supplied Infrared (IR) Remote Control.

IMPORTANT
Pressing any button while the mechanism is moving will STOP the mechanism.

Future Automation recommends that the mechanism runs on a Dead Man (hold-to-run) system for user safety. The installer is responsible for carrying out the necessary risk assessments and end user training before proceeding without Dead Man functionality.

CONTACT CLOSURE

This Mechanism can be controlled via Contact Closure, utilising an 8 Pin RJ45 Connector attached to a length of CAT5 (Type 568A or 568B) cable.

The mechanism's functions can be controlled by plugging this into the RJ45 port on the mechanism control board, then shorting pins 1-8 on this connector as shown in the Contact Closure Input Table below.

Confirmation of Contact Closure input will be shown by a single flash of the large green LED located on the end of the control box, as well as illumination of the corresponding Contact Closure LED on the printed circuit board as shown below.

RJ45 PIN LAYOUT

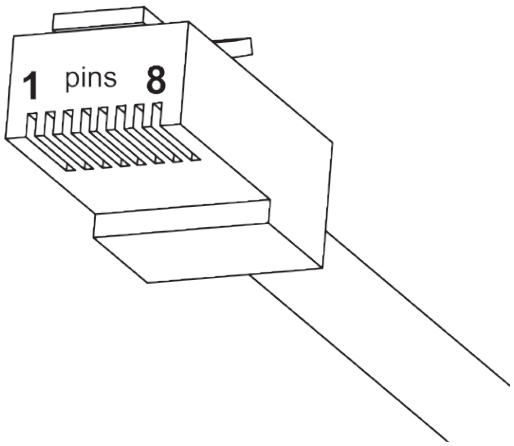

CONTACT CLOSURE LED LAYOUT

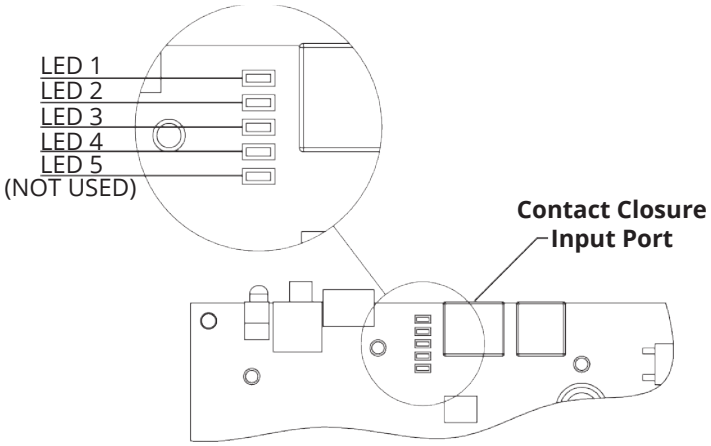

CONTACT CLOSURE INPUT TABLE

PIN	DESCRIPTION	MOMENTARY ACTION	DEAD-MAN SWITCH ACTION
1	12V SUPPLY	12V SUPPLY - CURRENT LIMITED	12V SUPPLY - CURRENT LIMITED
2	12V LATCH	WHEN 12V ATTACHED, DEVICE WILL GO OUT. WHEN 12V REMOVED, DEVICE WILL GO IN.	
3	GROUND	GROUND	GROUND
4	D-IN TOGGLE	SHORT TO GROUND (PIN 3), MAKES DEVICE GO TO PRESET D, REMOVE SHORT DEVICE WILL GO IN.	MOTION TO PRESET D REQUIRES CONTINUOUS SHORT TO GROUND (PIN 3); RELEASING THE SHORT STOPS MOVEMENT IMMEDIATELY.
5	OUT-IN TOGGLE	SHORT TO GROUND (PIN 3), MAKES DEVICE GO TO OUT, REMOVE SHORT DEVICE WILL GO IN.	
6	DEVICE STOP	MOMENTARY SHORT TO GROUND (PIN 3), STOPS THE MECHANISM.	SHORT TO GROUND (PIN 3), STOPS THE MECHANISM.
7	DEVICE OUT / STOP	MOMENTARY SHORT TO GROUND (PIN 3), WILL MAKE DEVICE GO OUT OR STOP IF MOVING.	MOTION OUT REQUIRES CONTINUOUS SHORT TO GROUND (PIN 3); RELEASING THE SHORT STOPS MOVEMENT IMMEDIATELY.
8	DEVICE IN / STOP	MOMENTARY SHORT TO GROUND (PIN 3), WILL MAKE DEVICE GO IN OR STOP IF MOVING.	MOTION IN REQUIRES CONTINUOUS SHORT TO GROUND (PIN 3); RELEASING THE SHORT STOPS MOVEMENT IMMEDIATELY.

WIRE/CABLE TYPE 568A	WIRE/CABLE TYPE 568B	LED INDICATOR
W G	W O	
G	O	
W O	W G	
B	B	
W B	W B	LED 4
O	G	LED 3
W BR	W BR	LED 2
BR	BR	LED 1

IMPORTANT

THE DEVICE CAN BE STOPPED BY SHORTING PINS 5,6,7 OR 8 TO GROUND (PIN 3) WHILST THE DEVICE IS MOVING

Future Automation recommends that the mechanism runs on a Dead Man (hold-to-run) system for user safety. The installer is responsible for carrying out the necessary risk assessments and end user training before proceeding without Dead Man functionality.

RS232
CONTROL

This Mechanism can be controlled via RS232, utilising a 6 Pin RJ11/RJ25 connector OR 9 Pin Serial connector attached to a length of 6 core cable.

The mechanism's functions can be controlled by plugging this into the RJ11/RJ25 port on the mechanism control box, then inputting the RS232 commands shown in the RS232 Input Table below.

Confirmation of Contact Closure input will be shown by a single flash of the large green LED located on the end of the control box.

RJ11/RJ25 PIN LAYOUT

PIN 1: TX
PIN 6: RX
PIN 3 & 4: GROUND

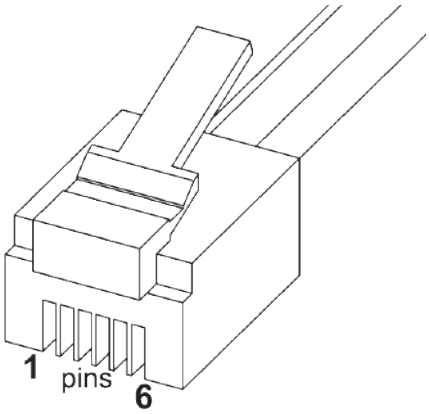

SERIAL PIN LAYOUT

PIN 2: RX
PIN 3: TX
PIN 5: GROUND

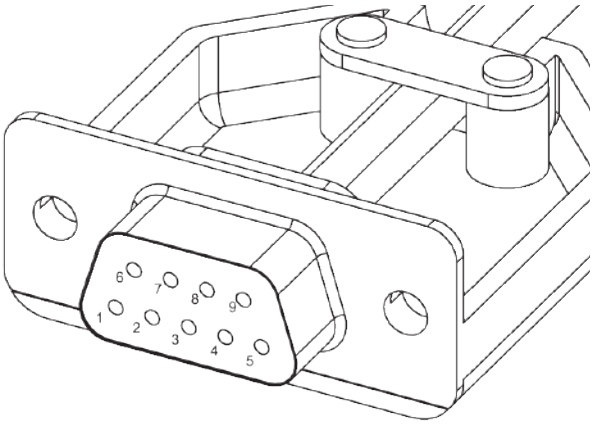

RS232 PROGRAMMING DETAILS

Baud Rate: 9600

Stop Bit: 1

Parity: None

Databits: 8

RJ11/RJ25	Func.	9 PIN Serial	Colour
PIN 1	TX	PIN 2	Blue
PIN 3	GROUND	PIN 5	Green
PIN 4	GROUND	PIN 5	Red
PIN 6	RX	PIN 3	White

RS232 INPUT TABLE

IMPORTANT - Ensure all protocols are entered exactly as written below, including Carriage Return (ENTER / ASCII 13)

Protocol	Action
fa_in Carriage Return (Enter / ASCII 13)	Device IN
fa_out Carriage Return (Enter / ASCII 13)	Device OUT
fa_stop Carriage Return (Enter / ASCII 13)	Device STOP (At any position)

Future Automation recommends that the mechanism runs on a Dead Man (hold-to-run) system for user safety. The installer is responsible for carrying out the necessary risk assessments and end user training before proceeding without Dead Man functionality.

EAL-S
ELECTRIC ADVANCE & LIFT WITH SWIVEL
INTEGRATION CONSIDERATIONS

General Mitigations:
- Activate hold-to-run (dead-man-switch) operation.
- Locate controls within direct line of sight of the mechanism.
- Implement password-protected or key-switch-protected operation.

For more information on ceiling integration follow link or scan the QR below https://fa.support/Files/CeilingGuidelines

For more information on Pressure Mat integration follow link or scan the QR below https://fa.support/Files/Pressure-Mat

MEDIUM RISK - CRUSH HAZARD
Crush hazard between the mechanism and the wall as it closes.

MITIGATION
Install a light curtain in front and behind the mechanism to create an exclusion zone. Install a pressure pad on any solid surfaces below the mechanism if sufficient space cannot be allocated.

HIGH RISK - IMPACT
Impact hazard from the mechanism as it swivels.

MITIGATION
Install a light curtain in front and behind the mechanism to create an exclusion zone. Install a pressure pad on any solid surfaces below the mechanism if sufficient space cannot be allocated.

HIGH RISK - IMPACT HAZARD
Impact hazard from the mechanism as it opens.

MITIGATION
Ensure area below the mechanism is kept clear at all times when the mechanism is being used. If installing or maintaining the mechanism do so with the mechanism turned off.

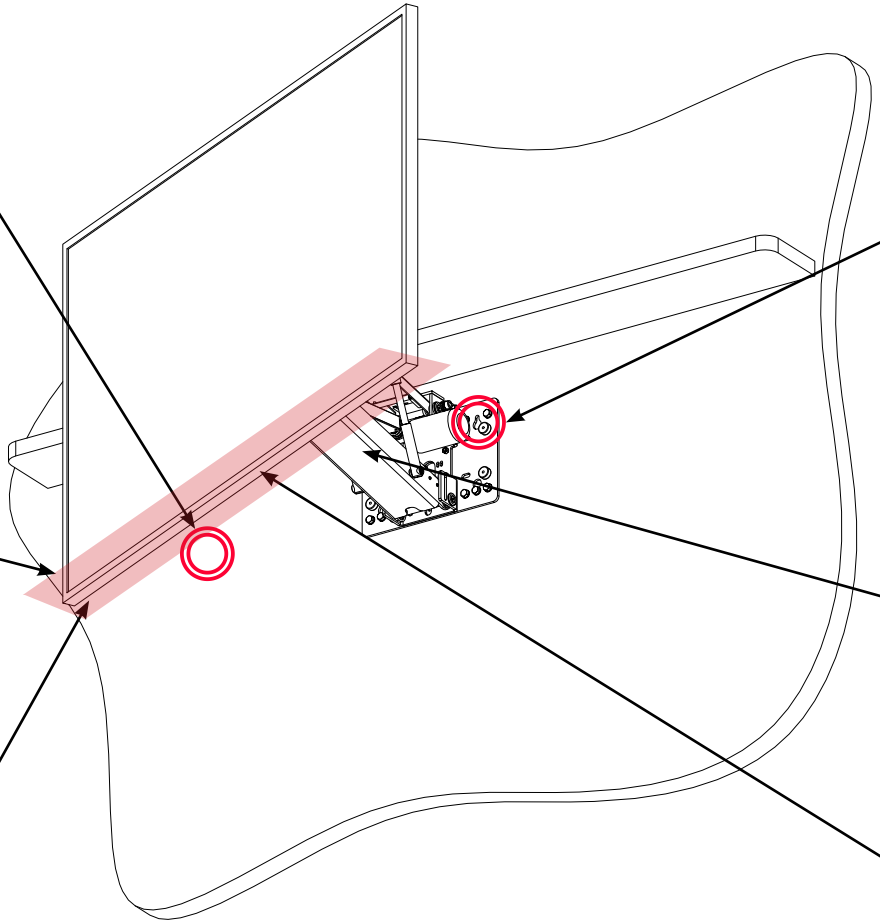

LOW RISK - FALLING
Mechanism falling from wall.

MITIGATION
Consult a structural engineer to make sure support structure and fixings are strong enough to take the weight of the mechanism and screen. See Tech sheet for details.

LOW RISK - CABLE SNAGGING HAZARD
Cables could be snagged if not properly managed through and around the mechanism, causing damage to the mechanism and electronics.

MITIGATION
Ensure all cables are fully restrained within suitable cable trunking.

HIGH RISK - IMPACT HAZARD
Items left below the mechanism can be crushed and/or cause damage to the mechanism as it opens.

MITIGATION
Ensure the area below the mechanism is kept clear at all times when operating. See also general mitigations.

The installer is responsible for conducting a site-specific risk assessment. Due to the unique conditions of each installation, Future Automation cannot provide an exhaustive list of all potential risks. Installers must ensure that all risks associated with installation, operation, and maintenance are identified and mitigated in accordance with applicable legislation and best practice.
Further safety and servicing guidance is available at:
www.futureautomation.net/safety

NOTES:

EUROPEAN OFFICE

Address:
Unit 6-8
Brunel Road
Bedford
Bedfordshire
MK41 9TG

Phone: +44 (0) 1438 833577
Email: info@futureautomation.co.uk

Office Hours:
Mon - Fri 8:00 to 17:30 GMT
Saturday & Sunday - Closed

NORTH AMERICAN OFFICE

Address:
Enterprise Park
127 Venture Drive
Dover
NH
03820

Phone: +1 (603) 742 9181
Email: info@futureautomation.net

Office Hours:
Mon - Fri 7:00 to 17:00 EST
Saturday & Sunday - Closed